ACURA SPA SYSTEMS, INC.		
UNIVERSAL SPA CONTROL SERIES-211		
MODEL:	**USC50SP2B1**	
240V	50A. Service	60 Hz
REVISION:	01/10/13	* Optional Items

WARNING: MUST BE WIRED PER NATIONAL ELECTRIC CODE AND ALL LOCAL CODES AND REGULATIONS.

NOTE: To supply 120V to the heater, move RED wire on load side of **Terminal Block** from RED (L2) to WHITE (N).

NOTE: To supply 120V to the pump, move BLUE wire on load side of **Terminal Block** from RED (L2) to WHITE (N).

WARNING: CONNECT ONLY TO A G.F.C.I. PROTECTED CIRCUIT.

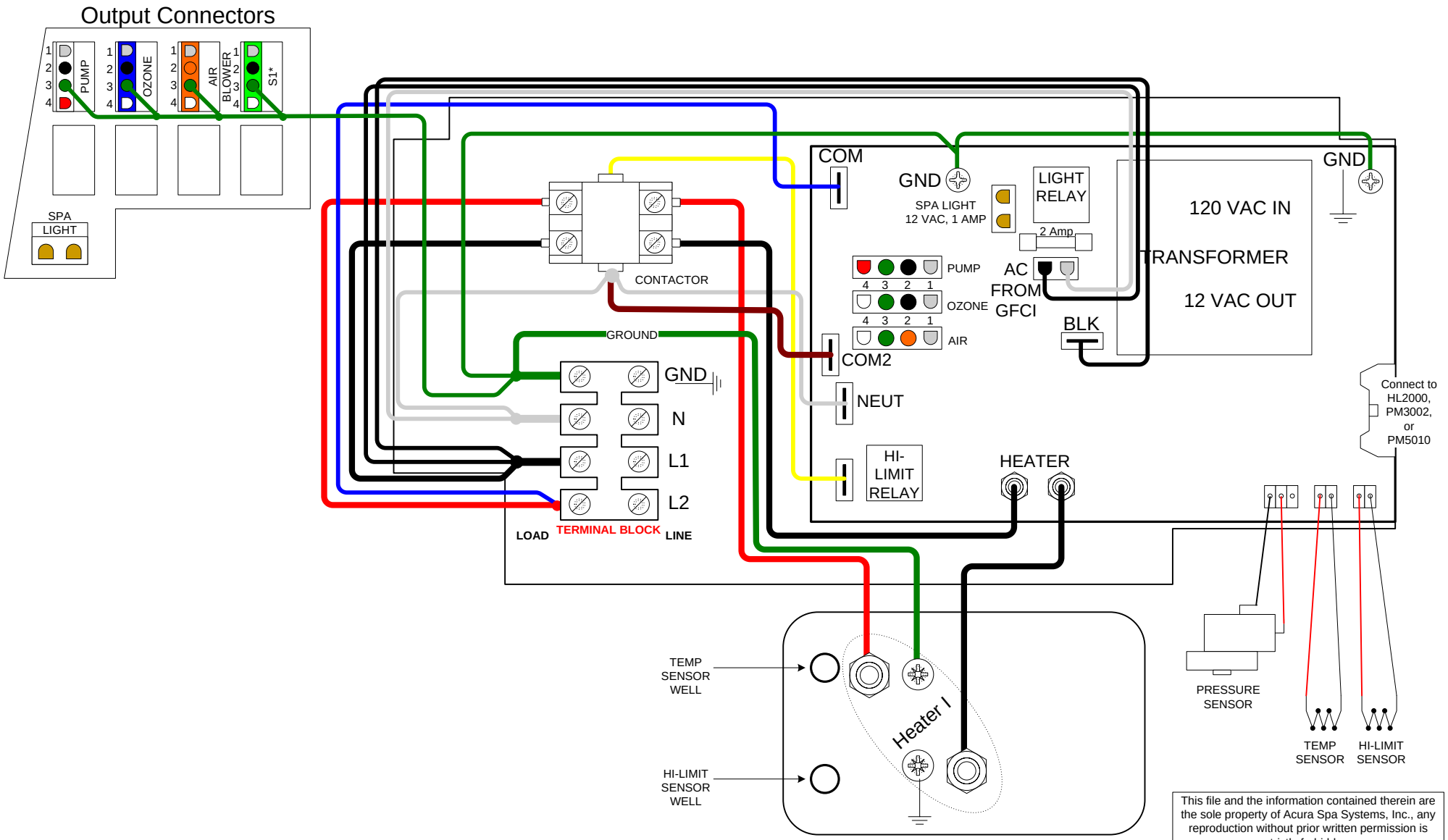

This file and the information contained therein are the sole property of Acura Spa Systems, Inc., any reproduction without prior written permission is strictly forbidden.